Technical Data Sheet		Rosenberger
HVR50WL	Pin Housing	**HWL121-5X-001B1-Y**

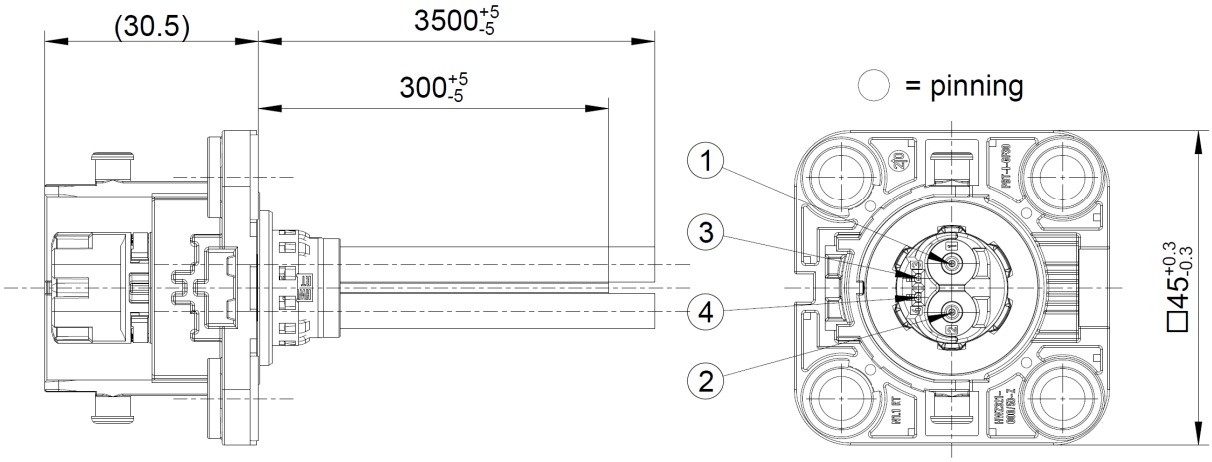

pinning	colour	cable
1	orange	6mm²
2	orange	6mm²
3	red	0.35mm²
4	black	0.35mm²

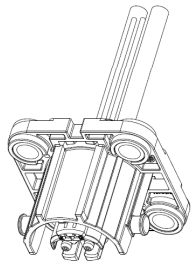

All dimensions are in mm
Y = Part number has to be accomplished by codification

Interface

According to RN_182-01

Documents

Test specification	PSA B21 7050 Rev. E
Assembly instruction	MA_HV0164
Panel piercing	MB_859

Material and plating

Connector parts	**Material**	**Plating /Colour**
Shielding	Brass	Ag, min. 0.5µm
Inner conductor	Copper	Ag, min. 3µm
Insulator	PA66+PA6T-GF25	acc. to coding table
C-ring	PA66-PA6-GF15	purple, sim RAL 4006
Touch protection cap	PA66-PA6T-GF25	natural
Housing	PBT-I-GF30	orange, sim RAL 2003
Seal	Silicone	red, sim RAL 3013
Press-in sleeve	Steel	ZiNi, min. 8µm

Dieses Dokument ist urheberrechtlich geschützt ● This document is protected by copyright ● Rosenberger Hochfrequenztechnik GmbH & Co. KG

Rosenberger Hochfrequenztechnik GmbH & Co. KG
P.O.Box 1260 D-84526 Tittmoning Germany
www.rosenberger.de
Tel. : +49 8684 18-0
Email : info@rosenberger.de

Cable

Power cable	FHLR2G-10
HVIL cable	FLR2X 0.35-A / T150

Electrical data acc. to B21 7050

Insulation resistance	≥ 100 MΩ at 1000 V DC
Voltage class	B 60 V DC< U ≤1500 V DC 25 V AC< U ≤1000 V AC
Power contact resistance (Current)	≤ 0.88 mΩ Test set-up acc. ind. E Appendix 1
Outer contact resistance (Current)	≤ 10 mΩ
Clearance and creepage distance	DIN EN60664-1
Pollution degree	2
Type of isolation	Basis
Max. Altitude	5000m
Working voltage	1000 V DC
Test voltage	2500 V DC
Rated impulse voltage	2500 V DC
EMC (transfer impedance)	< 10 mΩ (up to 1 MHz) < 100 mΩ (10 MHz)
High Voltage Interlock (HVIL)	yes

901

Mechanical data acc. to B21 7050

Mating cycles	≥ 50
Engagement force	≤ 30N
Coding efficiency	≥ 250N
Cable connection angle	180°
Vibration class	V1
Temperature class	T2

Environment acc. to B21 7050

Sealing class (mated)	2A (sim. IPX9K)
IP class (unmated)	IPXXB acc. to ISO 20653
IP class (mated)	IPXXD acc. to ISO 20653

Application

Applicable e.g. for following connectors:	HWK221-12A010B1-Y, HWK222-12A010B1-Y HWK121-12A010B1-Y, HWK122-12A010B1-Y

Packing

Standard	for packaging see data sheets of piece parts
Weight	ca. 39,7 g/pce

Dieses Dokument ist urheberrechtlich geschützt ● This document is protected by copyright ● Rosenberger Hochfrequenztechnik GmbH & Co. KG

Rosenberger Hochfrequenztechnik GmbH & Co. KG
P.O.Box 1260 D-84526 Tittmoning Germany
www.rosenberger.de

Tel. : +49 8684 18-0
Email : info@rosenberger.de

Coding

Part Number has to be accomplished by codification

Coding	Plug	Housing Colour / NF X08-002 / RAL	Insulator Colour / NF X08-002 / RAL	Part-Number
A	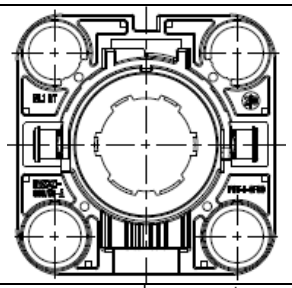	orange / sim. A110 / 2003	black / sim. A603 / 9004	HWL121-5X-001B1-A
B	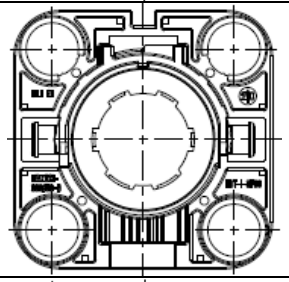	orange / sim. A110 / 2003	blue / sim. A570 / 5015	HWL121-5X-001B1-B
C	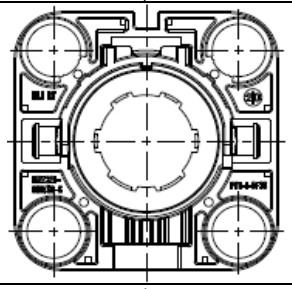	orange / sim. A110 / 2003	yellow / sim. A330 / 1026	HWL121-5X-001B1-C
Z	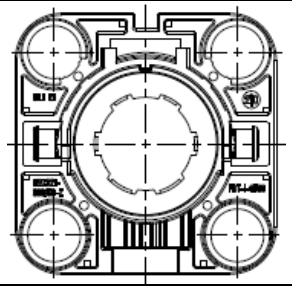	orange / sim. A110 / 2003	purple / sim. A790 / 4008	HWL121-5X-001B1-Z

Revision	Description	Position
901	Power contact resistance changed to ≤ 0.88 mΩ	Page 2

While the information has been carefully compiled to the best of our knowledge, nothing is intended as representation or warranty on our part and no statement herein shall be construed as recommendation to infringe existing patents. In the effort to improve our products, we reserve the right to make changes judged to be necessary.

Draft	Date	Approved	Date
P. Simon	23.01.2023	A. Hornung	31.10.2025

Rev.	Engineering change number	Name	Date
901	25-0879	P. Bossa	31.10.2025

Rosenberger Hochfrequenztechnik GmbH & Co. KG
P.O.Box 1260 D-84526 Tittmoning Germany
www.rosenberger.de

Tel. : +49 8684 18-0
Email : info@rosenberger.de

Dieses Dokument ist urheberrechtlich geschützt ● This document is protected by copyright ● Rosenberger Hochfrequenztechnik GmbH & Co. KG